SPECIFICATION

Class 2 Linear
Wallmount Adapter

120VAC Input
5VDC 0.5A Output

P/N: L050005YF-US

** Specification Approval**

This specification (total 7 pages including cover page) is approved in it's entirety by:

Company Name	Print Name	Signature	Date

Tel: 1-408-980-9813
Fax: 1-408-980-8626
Email: infor@topmicro.com
Web: www.topmicro.com
050411RB

1. Primary

Input Voltage	:	120VAC 60 Hz
Exciting Current	:	35mA Max.
Protected	:	125°C thermal fuse into winding

2. Secondary

Unloaded Current	:	10.0VDC ±5%
Loading Vlotage	:	5.00VDC ±5%
Loaded Current	:	500mA

3. Insulation Resistance

Pri. To Sec. and Chassis :
DC 500V 100 MEG OHM

4. Temperatutre Rise

At rated loading normal condition, 75°C Max.

5. Hi-Pot Withstand Tests

Pri. / Sec., Core and Chassis:
AC 2.0KV 50Hz at 1mA for 1 minute
Sec. / Core and Chassis:
AC 0.5KV 50Hz at 1mA for 1 minute

6. Transformer Impregnation

Varnish

7. Input Plug

UL Plug

8. Output Cord Type

2468# 24AWG, center-positive (whole assembly using ROHS compliant PVC.)

9. Strain Test

A direct pull 20 lbs force to input plug, for 60 seconds
A direct pull 10 lbs force to output line position, for 60 seconds
After sampling test, the cord shall be functional no intermittency
and pass electrical performance

10. Output Cord Bushing Bending Test

The cord withstand weight of 200G,bending angle is ± 60 (120 degree
in one cycle), bending rate is 45 cycles per minute, 200 times or more.
After sampling test, the cord shall be functional no intermittency
and pass electrical performance

11. Drop Test

At a height of 3ft, free drop to a concrete floor 3 times per unit.
After sampling test, the unit shall pass dielectric drop test.

12. Mechanical Drawing

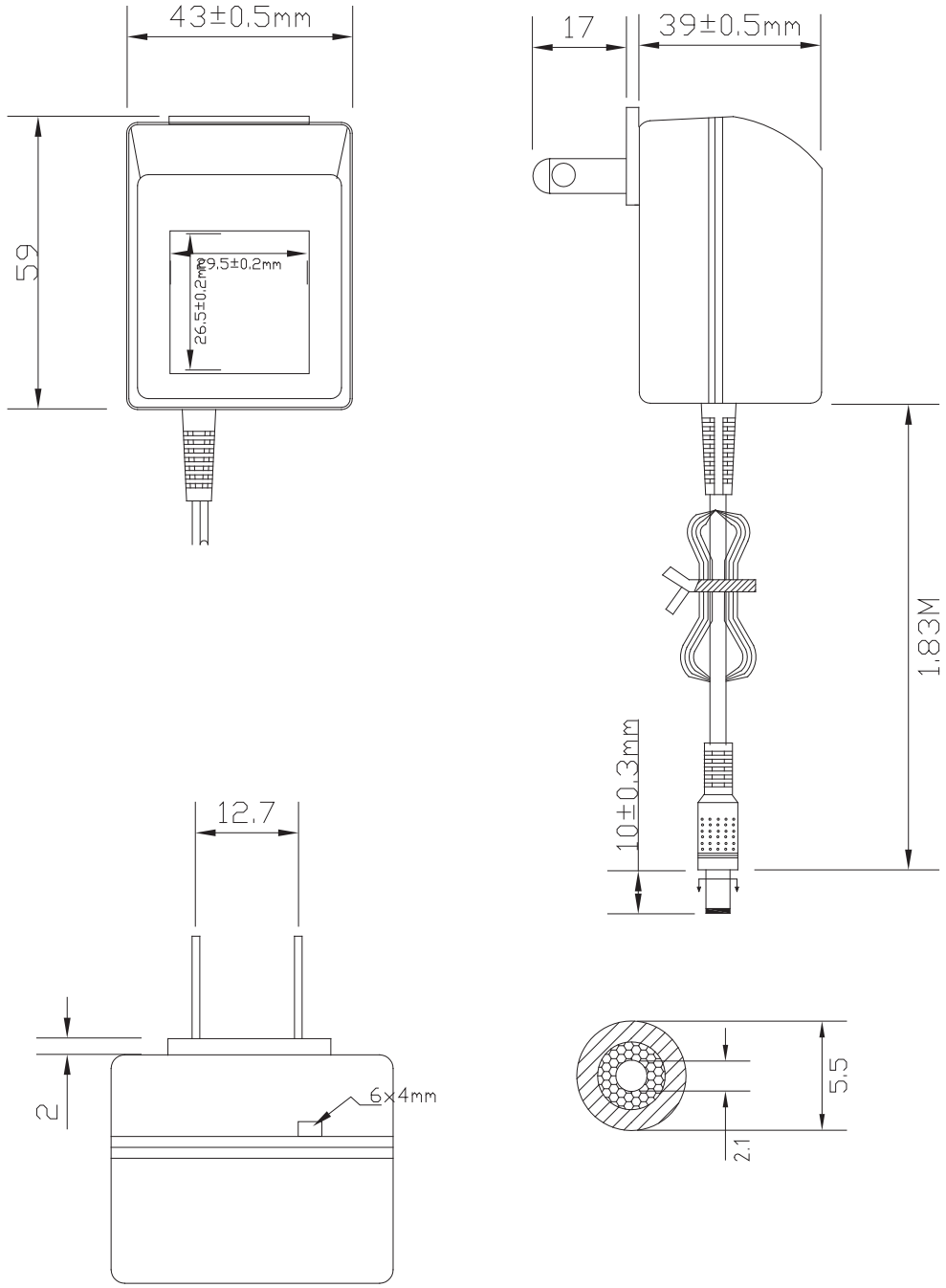

13. Electrical Circuit Diagram

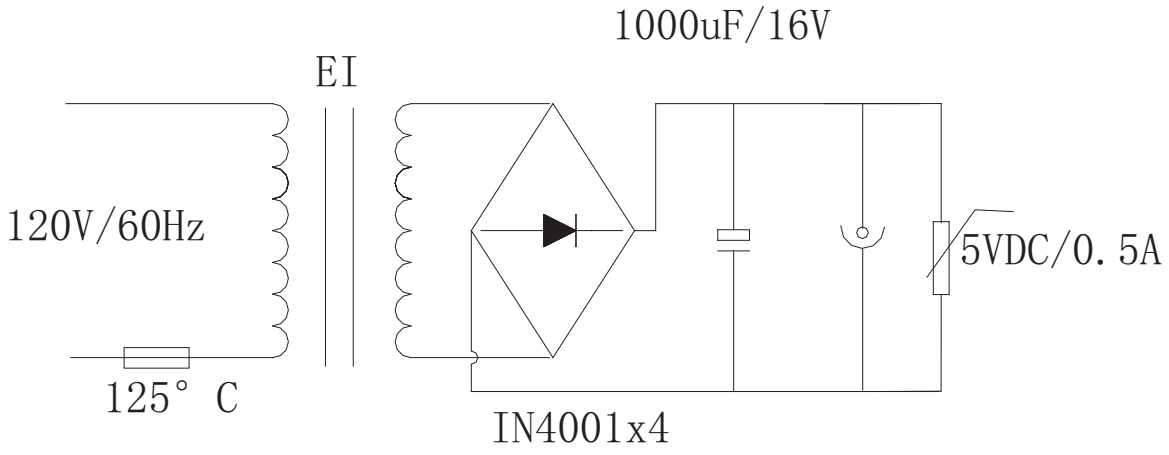

14. Materials List

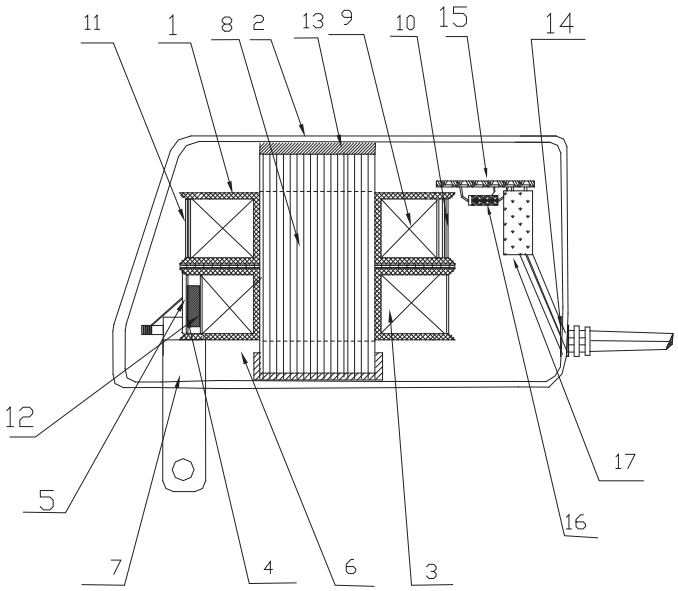

	Description	Material	Model
1	BOBBN	PA	UL
2	ENCLOSURE	2.0mm THICK PLASTICS	
3	WINDING OF PRI.	2UEW	
4	INSULATION TAPE OF PRI.	POLYESTER FILM TAPE(130℃)	8mm
5	FIBRE OF PRI.		35#
6	PRI. COIL OF WIRE INSULATION	POLYESTER FI TAPE(130℃)	8mm
7	WIRE TYPE OF PRI.		
8	CORE	H50(0.5N)	EI-35#
9	WINDING OF SEC.	2UEW	
10	INSULATION TAPE OF SEC.	POLYESTER FILM TAPE(130°C)	8mm
11	FIBRE OF SEC.		35#
12	THERMAL FUSE	A3-F 125℃ 2A	
13	SPONGE	1.0mm THICKNESS	
14	WIRE TYPE OF SEC.(DC)	2468#24AWG	
15	P.C BOARD	1.5mm THICKNESS	94V-0; 130℃
16	DIODE	IN4001	
17	ELEC.CAP	1000UF/16V	

15. Label

3:1

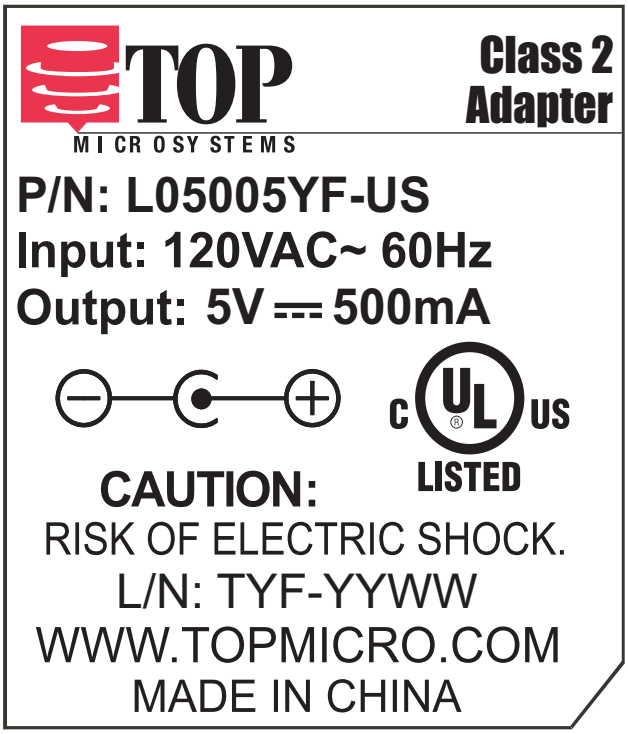
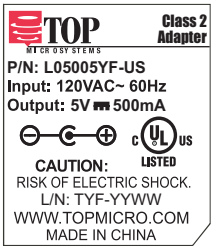
1:1